We connect and protect

Document Pocket

Data Solutions

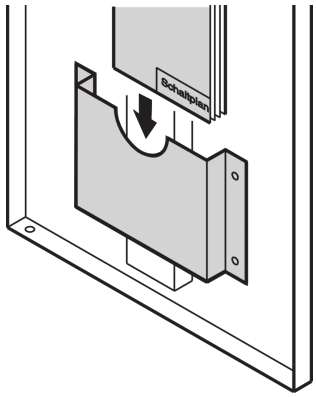

Document pockets for storage of documents and circuit diagrams, with easy mounting with double sided adhesive tapes.

CERTIFICATIONS

RoHS COMPLIANT

FEATURES

For storage of documents and circuit diagrams

Mounts using dual-sided adhesive tape

SPECIFICATIONS

Product Type: File Holder

Table 1/1

Catalog Number	Material	Package Quantity	Finish
60100-302	Polystyrene	1	
21126-271	Steel	1	Powder Coated

WARNING

nVent products shall be installed and used only as indicated in nVent's product instruction sheets and training materials. Instruction sheets are available at www.nvent.com and from your nVent customer service representative. Improper installation, misuse, misapplication or other failure to completely follow nVent's instructions and warnings may cause product malfunction, property damage, serious bodily injury and death and/or void your warranty.

Our powerful portfolio of brands:

CADDY ERICO HOFFMAN ILSCO SCHROFF TRACHTE

©2026 nVent. All nVent marks and logos are owned or licensed by nVent Services GmbH or its affiliates. All other trademarks are the property of their respective owners. nVent reserves the right to change specifications without notice.

This document is system-generated.