We connect and protect

19" Module Support

Data Solutions

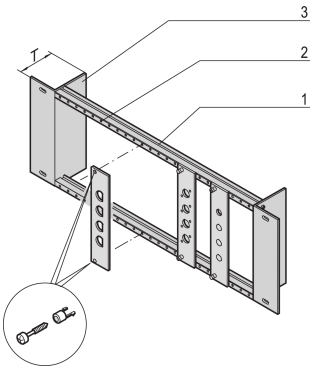

Module support is needed for assembly of partial width front panels with SUB-D-, ST type 3 or FDDI cut-outs, with or without strain relief rail.

CERTIFICATIONS

RoHS COMPLIANT

FEATURES

For assembly of partial width front panels with SUB-D-, ST type 3 or FDDI cut-outs

Optional front panels Al, 2,5 mm, RAL 7035

Available in two versions: with or without strain relief rail

SPECIFICATIONS

Table 1/1

Catalog Number	Material	Finish	Package Quantity	Product Type
20118-630	Steel	Aluminum-Zinc Plated	1	Hardware Kit

ADDITIONAL PRODUCT DETAILS

Please order front panel with / without cut-outs or quick release fastener separately.

Please order 19" assembly kit separately.

WARNING

nVent products shall be installed and used only as indicated in nVent's product instruction sheets and training materials. Instruction sheets are available at www.nvent.com and from your nVent customer service representative. Improper installation, misuse, misapplication or other failure to completely follow nVent's instructions and warnings may cause product malfunction, property damage, serious bodily injury and death and/or void your warranty.

Our powerful portfolio of brands:

CADDY ERICO HOFFMAN ILSCO SCHROFF TRACHTE

©2026 nVent. All nVent marks and logos are owned or licensed by nVent Services GmbH or its affiliates. All other trademarks are the property of their respective owners. nVent reserves the right to change specifications without notice.

This document is system-generated.