We connect and protect

# Document Pocket

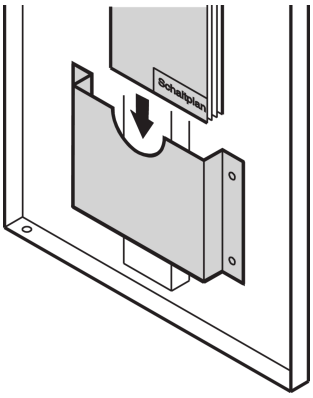


Document pockets for storage of documents and circuit diagrams, with easy mounting with double sided adhesive tapes.

## CERTIFICATIONS

RoHS COMPLIANT

## FEATURES

For storage of documents and circuit diagrams

Mounts using dual-sided adhesive tape

## SPECIFICATIONS

**Product Type:** File Holder

Table 1/1

| Catalog Number | Material | Package Quantity | Finish |
|---|---|---|---|
| 21126-271 | Steel | 1 | Powder Coated |
| 60100-302 | Polystyrene | 1 | |

## WARNING

nVent products shall be installed and used only as indicated in nVent's product instruction sheets and training materials. Instruction sheets are available at www.nvent.com and from your nVent customer service representative. Improper installation, misuse, misapplication or other failure to completely follow nVent's instructions and warnings may cause product malfunction, property damage, serious bodily injury and death and/or void your warranty.

**North America**
All locations
+1.763.422.2661
Chat with us:
nvent.com/schroff

**Europe**
Straubenhardt, Germany
+49.7082.794.0
Betschdorf, France
+33.3.88.90.64.90
Warsaw, Poland
+48.22.209.98.35
Assago, Italy
+39.02.932.7141
Chat with us:
nvent.com/schroff

**Asia**
Shanghai, China
+86.21.2412.6943
Qingdao, China
+86.532.8771.6101
Singapore
+65.6768.5800
Shin-Yokohama, Japan
+81.45.476.0271
Chat with us:
nvent.com/schroff

**Middle East & India**
Dubai, United Arab Emirates
+971.4.378.1700
Bangalore, India
+91.80.6715.2001
Istanbul, Turkey
+90.216.250.7374
Chat with us:
nvent.com/schroff

Our powerful portfolio of brands:

**CADDY ERICO HOFFMAN ILSCO SCHROFF TRACHTE**

©2026 nVent. All nVent marks and logos are owned or licensed by nVent Services GmbH or its affiliates. All other trademarks are the property of their respective owners. nVent reserves the right to change specifications without notice.

This document is system-generated.