We connect and protect

Varistar Assembly Kit

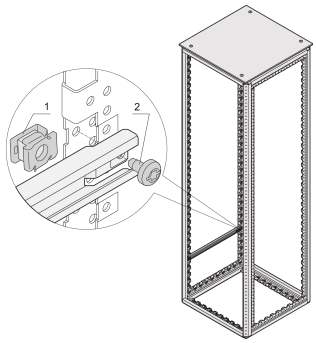

Assembly Kit for mounting Accessories directly on the Varistar CP Frame from the outside or inside.

CERTIFICATIONS

RoHS COMPLIANT

FEATURES

- Mounting of components possible from the inside as well as from the outside
- For direct assembly of 19" panel/slide mounts, depth members and other components on Varistar CP frame (2 mm)
- Assembly by clipping in the cage nut into frame or depth member
- Kit is required if rear panel with quick-release fastener is assembled above the connecting plate

SPECIFICATIONS

Product Type: Assembly Kit
Material: Steel
Finish: Zinc Plated

Table 1/1

Catalog Number	Package Quantity	Torque	Type
23130-674	50	5N·m	Screw with Washer
23130-285	50	5N·m	Screw
23130-141	50		Screw with Nuts

WARNING

nVent products shall be installed and used only as indicated in nVent's product instruction sheets and training materials. Instruction sheets are available at www.nvent.com and from your nVent customer service representative. Improper installation, misuse, misapplication or other failure to completely follow nVent's instructions and warnings may cause product malfunction, property damage, serious bodily injury and death and/or void your warranty.

North America
All locations
+1.763.422.2661
Chat with us:
nvent.com/schroff

Europe
Straubenhardt, Germany
+49.7082.794.0
Betschdorf, France
+33.3.88.90.64.90
Warsaw, Poland
+48.22.209.98.35
Assago, Italy
+39.02.932.7141
Chat with us:
nvent.com/schroff

Asia
Shanghai, China
+86.21.2412.6943
Qingdao, China
+86.532.8771.6101
Singapore
+65.6768.5800
Shin-Yokohama, Japan
+81.45.476.0271
Chat with us:
nvent.com/schroff

Middle East & India
Dubai, United Arab Emirates
+971.4.378.1700
Bangalore, India
+91.80.6715.2001
Istanbul, Turkey
+90.216.250.7374
Chat with us:
nvent.com/schroff

Our powerful portfolio of brands:

CADDY ERICO HOFFMAN ILSCO SCHROFF TRACHTE

©2026 nVent. All nVent marks and logos are owned or licensed by nVent Services GmbH or its affiliates. All other trademarks are the property of their respective owners. nVent reserves the right to change specifications without notice.

This document is system-generated.